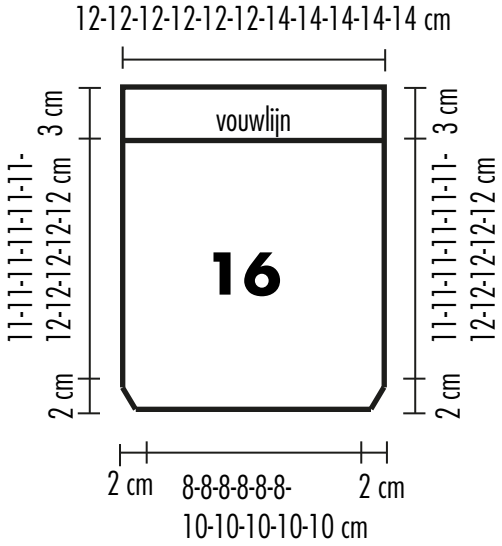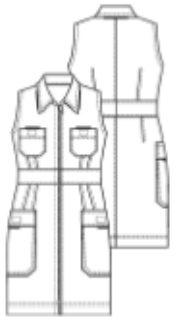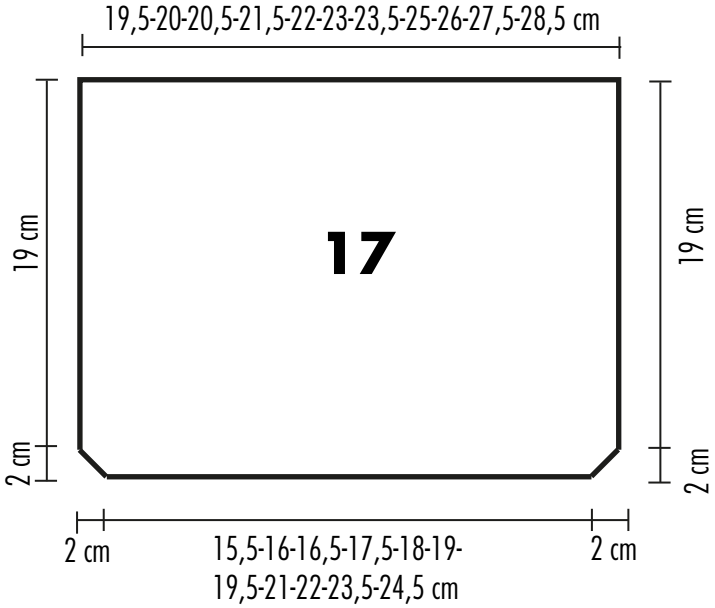KNIP juni 2018 model 12